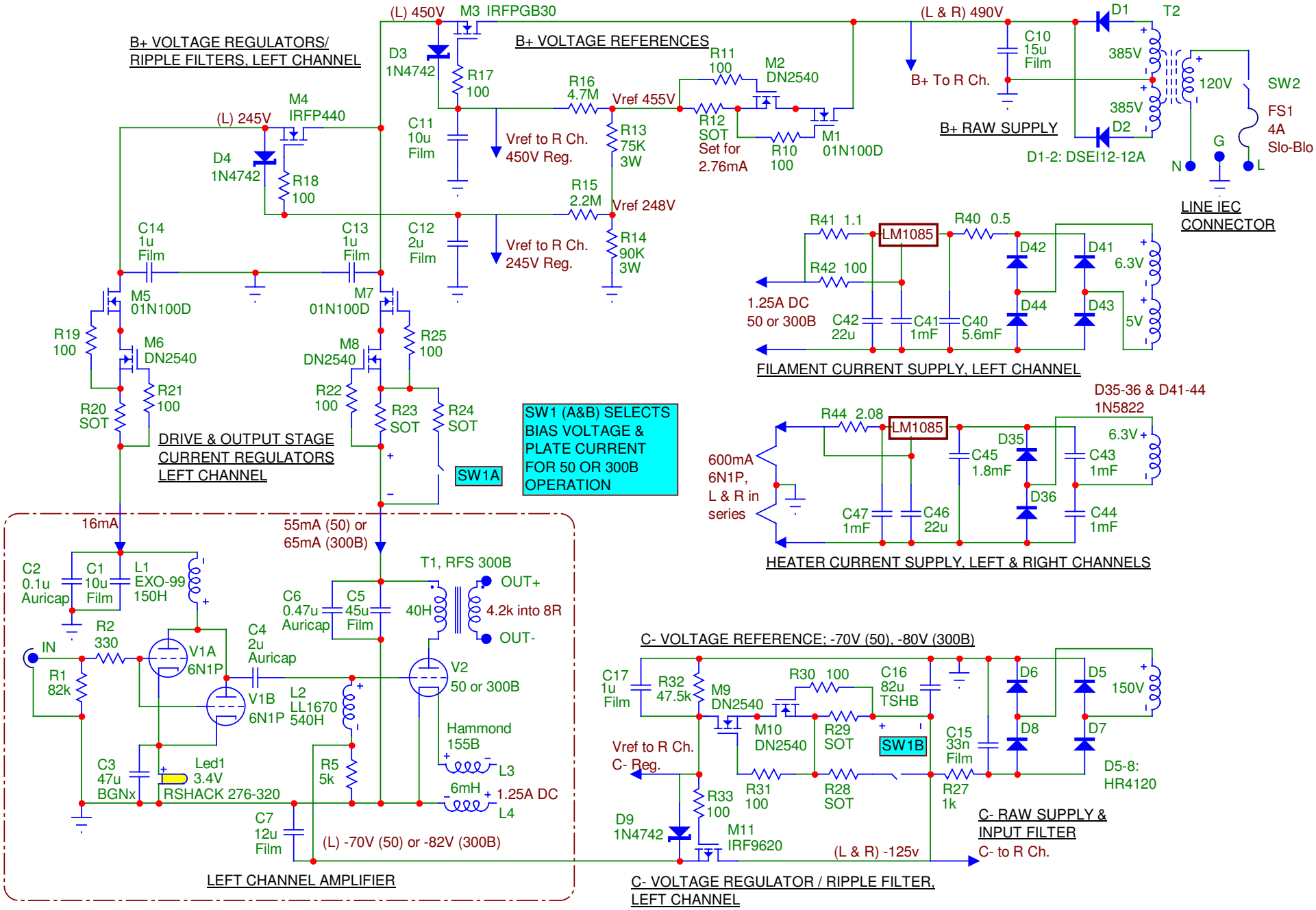

Richard Sears copyright 2009
All rights reserved

50 / 300B Constant Current SE

Rev. - 9/22/09