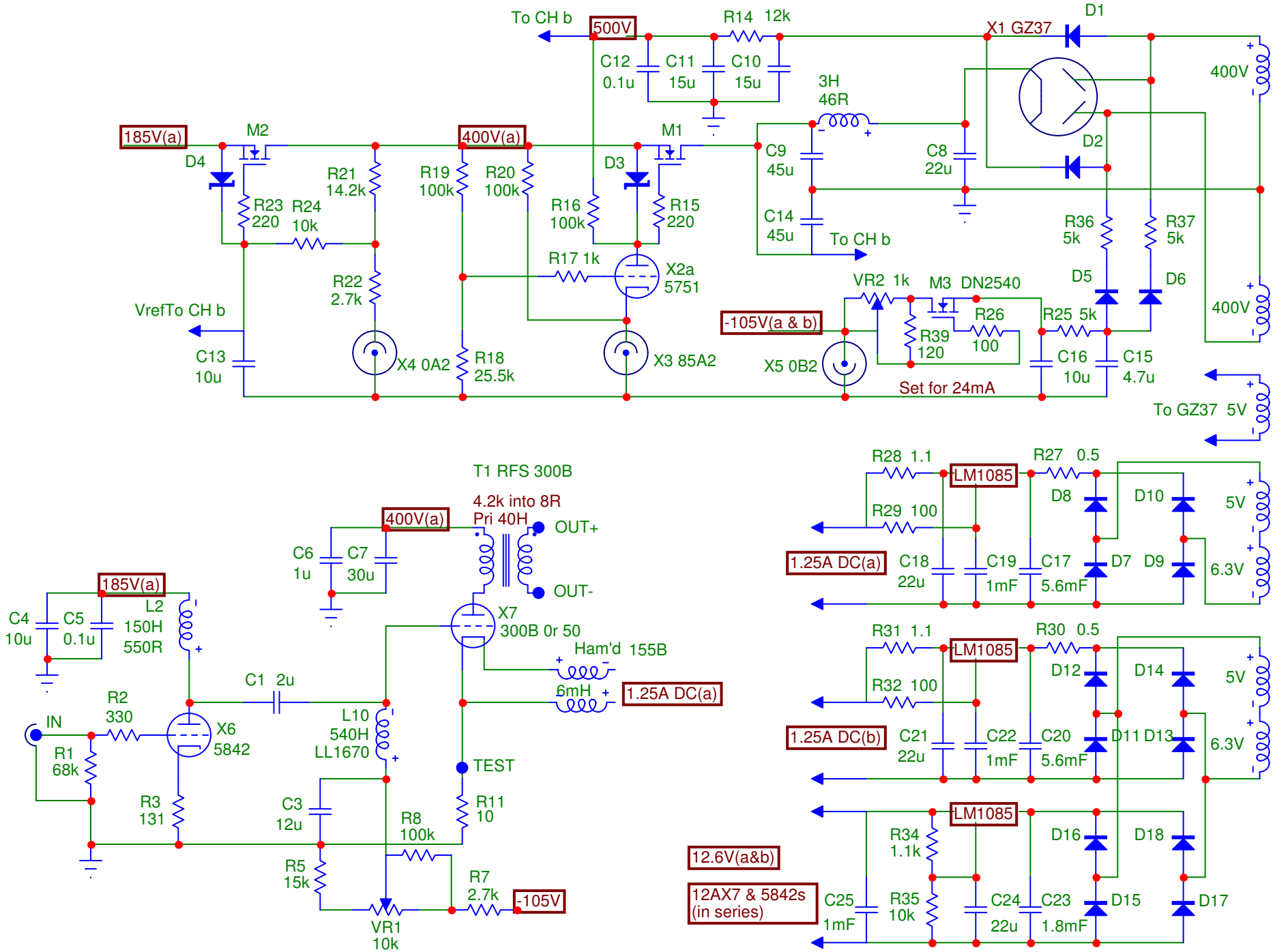

Richard Sears copyright 2003
All rights reserved

300B or 50 SE